User manual

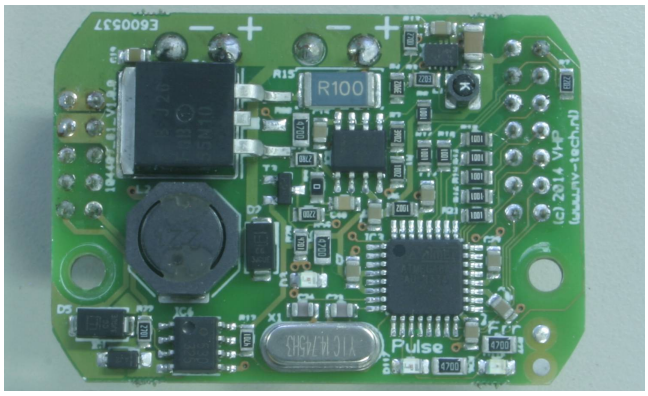

Lightning OEM 10

Product no:	104409_01
Versions:	V1.0
Release date:	30 Jul 2019
	Vision Hardware Partner De Steiger 59 1351AD Almere The Netherlands www.VisionHardwarePartner.nl info@VisionHardwarePartner.nl

Foreword / disclaimer

This documentation has been prepared with the most possible care. However, Vision Hardware Partner does not take any liability for possible errors in the documentation.

In the interest of progress, Vision Hardware Partner reserves the right to perform technical changes

without further notice.

Please notify Vision Hardware Partner (support@VisionHardwarePartner.nl) if you become aware

of any errors in this manual or if a certain topic requires more detailed documentation.

This manual is intended for users of Vision Hardware Partner products only. Any publication of this

document or parts thereof requires written permission by Vision Hardware Partner.

Please provide feedback

Dear user,

Vision Hardware Partner has a rich experience of using machine vision products in industrial environments. We try to use this experience to create products which are robust, easy to use and suit your requirements while still being affordable.

However, not all applications are the same and not all users have the same requirements. In order to make sure that the needs of as many as possible customers are served it is important to keep in touch with them. So if you can spare a minute please tell us what you do and do not like about our product. This way you will help us to keep on improving our solutions for your machine vision challenges.

You can do this by sending a e-mail to feedback@VisionHardwarePartner.nl.

Thanks in advance.

About Lightning OEM 10

Lightning OEM 10 is a low-cost power supply designed to pulse-drive LED-lamps at currents up to 10A.

The current pulses are supplied from an internal charge buffer, which is recharged at a lower current. Because of his the Lightning OEM 10 can supply pulse currents up to 10A, while typically drawing no more than 3A supply current.

This OEM version is designed specifically for easy integration with a custom made LED lamp. The driver is configured by setting a number of digital and analogue inputs.

1 About pulsing

Pulsing LEDs is a good solution to avoid heat problems. If the pulse is short enough, and sufficient time is provided for the lamp to cool down, the lamp can be pulsed at currents higher than rated for continuous use. Even if the lamp would run at its rated current a heatsink might be necessary, which can be omitted when in pulse mode. The basic assumption with pulse mode is that the average power to the lamp (average over on-time and off-time) does not exceed the rated power for continuous mode.

To assert this assumption the lamp on-time is limited to a configurable value, after which the lamp is disabled for a certain configurable duration (the so called cooldown time). During the cooldown time the controller will not allow the lamp to be switched on. Any incoming trigger during the cooldown cycle will be ignored.

Not only the lamps safety relies on this safety mechanism. It is also used to recharge the energy storage to the set level, and to let the pulse current limiter cool down.

2 Functional overview

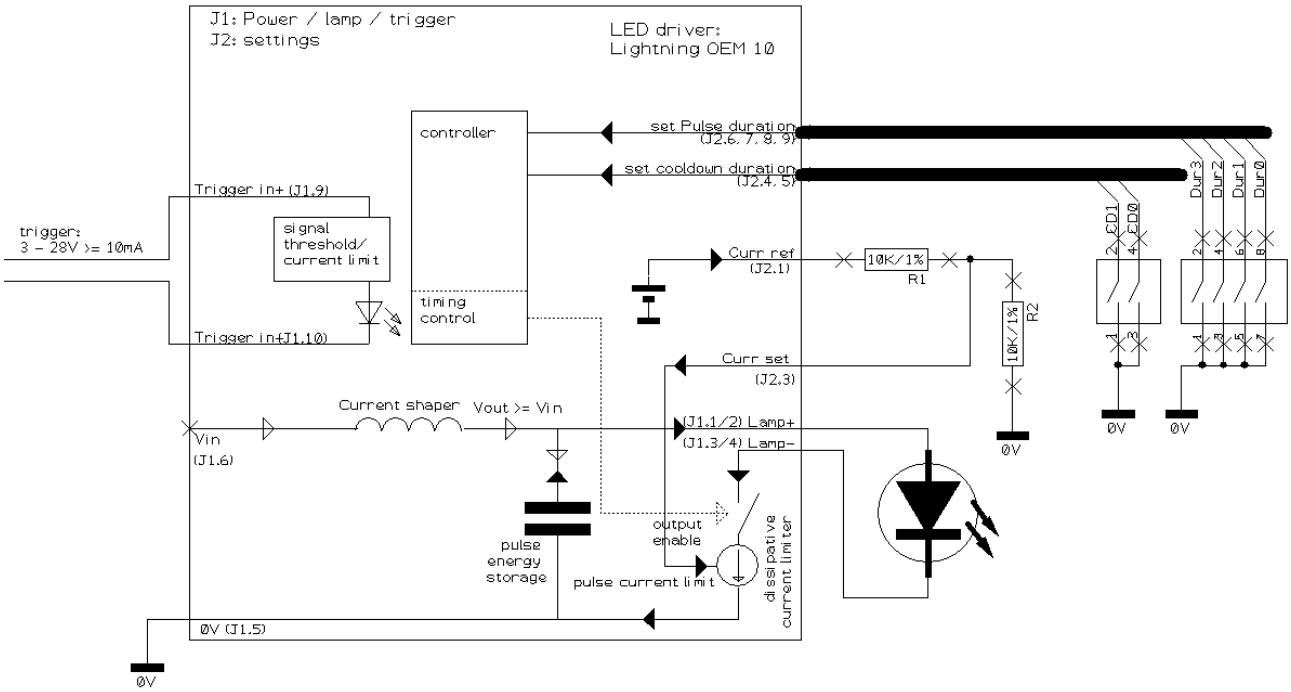

Figure 1: Block diagram (pulse current set to 5A)

Pulse current limiter:
The pulse current limiter (shown at the lower right corner of figure 1) regulates the lamp current to a set limit during the the pulse. The limiter is a fast linear regulator in which the voltage difference between the buffer voltage and the required lamp voltage, is converted to heat.
The pulse current limiter is not suitable for use in continuous mode.

Pulse energy storage:
The lamp is powered from a local energy buffer. This buffer allows for pulse currents up to 10A to be supplied to the lamp while drawing a considerably lower current from the Power + terminal.

Current shaper:
The buffer is recharged through an inductance. The inductance will not allow steps in the input current. This means a short high current pulse at the output is converted to a longer lower current pulse at the input.

Controller:
The controller is used to set the duration of the pulse and the cooldown time.
These are set through digital inputs that can either be connected to 0V, or left open.

Trigger input:
The digital trigger input works at all signal levels from 3V (LVTTL) to 24V. It requires at least 5mA to detect a trigger.

Getting started

1 Connecting the device

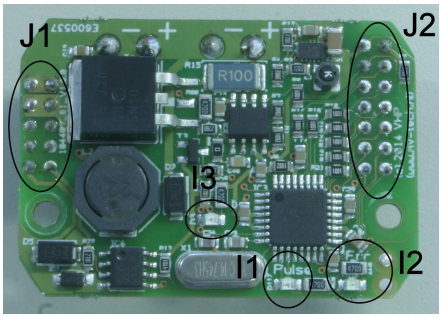

There are two connectors.

- J1 is used to connect the power, lamp and trigger input. All connections on J1 connect to the outside world
- J2 is used to configure the device. All connections on J2 are designed to **not** connect to the outside world. Keep wires from J2 as short as possible.

J1: Power / lamp / trigger input

Pin	Function	description
1,2	Lamp +	Connect to the lamp. *!!! Important note !!!* *Lamp + does **not** equal Power +.* *Lamp – does **not** equal Power 0V* *Connect the lamp only to pins 1,2 and 3,4* 10A is high current. Use wide PCB traces or large wires and keep them short to avoid voltage drops over the wires.
3,4	Lamp -	
5	Power 0V	Connect to supply power.
6	Power +V	
7,8	Not connected	
9	Trigger +	Trigger signal. The trigger input has galvanic separation. For best noise immunity do not connect trigger- to 0V. If trigger- is connected to 0V then it should be done at the transmitter side and the signal+ and - should be transported in two dedicated wires. The device triggers on a rising edge of the input signal.
10	Trigger-	

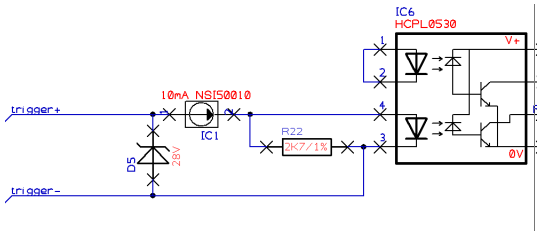

Figure 2: Trigger input schematic

J2: configuration

<table>
<tr><th>Pin</th><th>Function</th><th>description</th></tr>
<tr><td>1</td><td>Reference for set current</td><td rowspan="2">For setting the pulse current

Connect resistive divider as shown in figure 1.
Use only the 0V from J2 (not from J1) for the voltage divider.

The division factor sets the pulse current. The pulse current is calculated as follows:

Ipulse = 10* R2/(R1+R2)

the sum R1 + R2 must be in the range 2...22K</td></tr>
<tr><td>3</td><td>Set current input</td></tr>
<tr><td>2</td><td>0V</td><td>Used to set the pulse current and the digital inputs.</td></tr>
<tr><td>4</td><td>CD 1 (Cooldown 1)</td><td rowspan="2">Sets the cooldown duration.

<table>
<tr><th>CD 1</th><th>CD 0</th><th>Cooldown duration (ms)</th></tr>
<tr><td>open</td><td>open</td><td>10</td></tr>
<tr><td>open</td><td>0V</td><td>20</td></tr>
<tr><td>0V</td><td>open</td><td>30</td></tr>
<tr><td>0V</td><td>0V</td><td>40</td></tr>
</table></td></tr>
<tr><td>5</td><td>CD 0 (Cooldown 0)</td></tr>
<tr><td>6</td><td>PD 3 (pulse duration 3)</td><td rowspan="4">Sets the pulse duration.

<table>
<tr><th>PD 3</th><th>PD 2</th><th>PD 1</th><th>PD 0</th><th>Pulse duration (µs)</th></tr>
<tr><td>Open</td><td>Open</td><td>Open</td><td>open</td><td>50</td></tr>
<tr><td>open</td><td>open</td><td>open</td><td>0V</td><td>100</td></tr>
<tr><td>open</td><td>open</td><td>0V</td><td>open</td><td>150</td></tr>
<tr><td>open</td><td>open</td><td>0V</td><td>0V</td><td>200</td></tr>
<tr><td>open</td><td>0V</td><td>open</td><td>open</td><td>250</td></tr>
<tr><td>open</td><td>0V</td><td>open</td><td>0V</td><td>300</td></tr>
<tr><td>open</td><td>0V</td><td>0V</td><td>open</td><td>350</td></tr>
<tr><td>open</td><td>0V</td><td>0V</td><td>0V</td><td>400</td></tr>
<tr><td>0V</td><td>open</td><td>open</td><td>open</td><td>450</td></tr>
<tr><td>0V</td><td>open</td><td>open</td><td>0V</td><td>500</td></tr>
</table></td></tr>
<tr><td>7</td><td>PD 2 (pulse duration 2)</td></tr>
<tr><td>8</td><td>PD 1 (pulse duration 1)</td></tr>
<tr><td>9</td><td>PD 0 (pulse duration 0)</td></tr>
</table>

<table>
<tr><th>Pin</th><th>Function</th><th>description</th></tr>
<tr><td></td><td></td><td>
<table>
<tr><td>0V</td><td>open</td><td>0V</td><td>open</td><td>550</td></tr>
<tr><td>0V</td><td>open</td><td>0V</td><td>0V</td><td>600</td></tr>
<tr><td>0V</td><td>0V</td><td>open</td><td>open</td><td>650</td></tr>
<tr><td>0V</td><td>0V</td><td>open</td><td>0V</td><td>700</td></tr>
<tr><td>0V</td><td>0V</td><td>0V</td><td>open</td><td>800</td></tr>
<tr><td>0V</td><td>0V</td><td>0V</td><td>0V</td><td>1000</td></tr>
</table>
</td></tr>
<tr><td>10, 11, 12, 13, 14</td><td>Reserved</td><td>Do not connect</td></tr>
</table>

2 *Indicators*

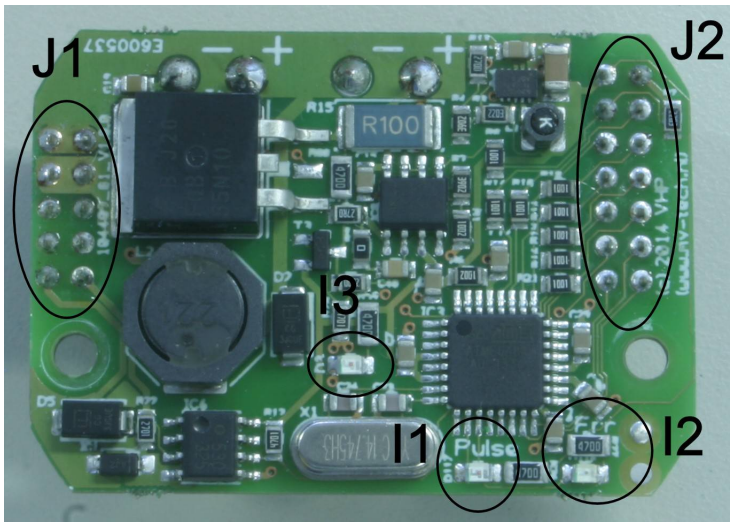

indicator	Function	description
I1	Pulse	Lights when a trigger is received and a pulse cycle is active. When the LED is on any incoming triggers will be ignored.
I2	Error	Lights in case of a hardware malfunction
I3	Power OK	Lights when power is applied

Specifications

1 Dimensions

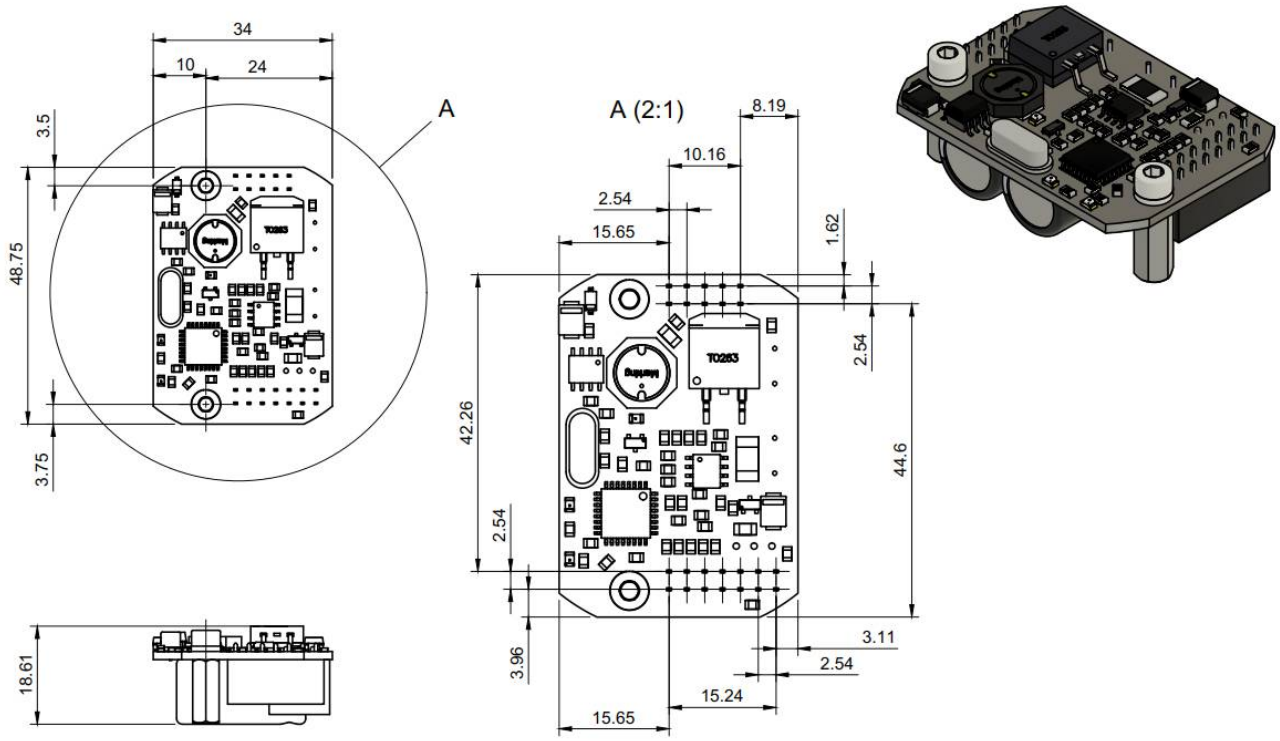

2 Electrical characteristics

Item	min	typ	max	unit
Supply voltage	20	24	28	V
Enable input voltage	-0,5		28	V
Enable signal high treshold	2.0	3.0	4.0	V
enable high input current		10	11	mA
Pulse driver dissipation (absolute max)			1*	W
Pulse driver dissipation (recommended)		0,75*		W

*** Please read Appenix A for the details on power dissipation.**

3 Timing

Item	min	typ	max	unit
Response time enable signal*			10	µS
Current stable			3	µS

set pulse current needs to be > 100mA

4 Range / resolution

Item	min	max	res	unit
Pulse mode output current	0	10		A
Pulse duration	50	1000	50/200	µS
Cooldown duration	10	40	10	mS

5 Temperature

Item	min	typ	max	unit
operating temperature fully functional	0		45	ºC
operating temperature with derated driver power	0		85	ºC

Appendix A: calculations

context

The current regulation in pulse mode is done completely by a linear current regulator. The driver will convert the difference between the buffer voltage and the needed lamp voltage to heat.
The heat is dissipated by airflow around the driver. As the driver is rather small the heatsinking capability is limited.
The ratings assume an environment temperature of maximally 45ºC and free air flow around the driver.

The heatsinking can be improved by mechanically connecting the driver to the housing of the users product, or a larger heatsink. In the following situations additional heatsinking might be required:

- When there is no free air flow around the driver
- When the environment temperature might exceed 45ºC
- When the average power in the driver exceeds 1W.

Note: Vision Hardware Partner will only commit to the specifications in this manual. The user can contact us for advice and we will help him best as we can, but without any warranty on any use exceeding the herewith provided specifications

Pulse driver dissipation

When pulsing at frequencies exceeding 10Hz and pulse durations of >= 500uS the user needs to confirm that the drivers ratings will not be exceeded.

The momentary power dissipated in the driver equals the voltage over the driver * the set current.
The voltage over the driver equals the buffer voltage – the output voltage.
The output voltage will equal the lamp pulse voltage (depends on the number of LEDs in series and the set pulse current).
The buffer voltage will drop during the pulse a certain amount as the buffer drains.
Please note: If the buffer voltage will fall below the required lamp voltage, the set current will not be achieved.

At the start of the pulse the buffer voltage should be equal to the supply voltage.

The average driver dissipation is calculated with the following simplified formula:

$P_d = (V_{buf} - V_{lamp}) * I_{set} * T_{pulse} * F_{pulse}$

In which:

P_d	is the dissipated power in Watts
V_{buf}	is the buffer voltage in Volts at the start of the pulse
I_{set}	is the output current set in Amperes
V_{lamp}	is the estimated lamp voltage at the set current in Volts
T_{pulse}	is the pulse duration set in Seconds
F_{pulse}	is the maximum pulse frequency in Hz

This formula assumes that the buffer voltage will be the same during the whole pulse. This is a pessimistic (safe) approach. If the result of this formula is a safe power value then these are safe settings.

Note that the values T_{pulse} and F_{pulse} have a large influence on the dissipated power.

If the resulting value is near the maximum the below mentioned more accurate formula can be calculated to check if it is still on the safe side.

$Pd = (Vbuf - 0.5*Vdrop - 0.1*Iset - Vlamp) * Iset * Tpulse * Fpulse$

In which:

V_{drop} is the buffer voltage drop during the pulse (explained later)

Voltage drop due to buffer drain

As mentioned before, the high pulse current is achieved by using a power buffer. The buffer will drain during the pulse. Due to this the useful pulse duration and current are limited.

Note: this is an estimated voltage drop. It is recommend to make settings such that the minimum pulse voltage is at least 2V higher than the required minimum lamp voltage.

$V_{drop} = 0.1*I_{set} + (I_{set} * T_{pulse}) / 2000$

In which:

V_{drop} is the voltage drop during a single pulse
I_{set} is the output current set in amperes
T_{pulse} is the pulse duration set in Microseconds (µS)

In order to keep the output current regulated the output voltage must be set to a value which includes both the buffer voltage drop and the lamp voltage. The formula for meeting this condition is:

$V_{out} >= V_{drop} + V_{lamp}$

V_{out} is the output voltage that needs to be set in order to remain within regulation
V_{drop} is the voltage drop over a single pulse as calculated above
V_{lamp} is the estimated lamp voltage at the set current

Appendix B: Carrier board 104409_02

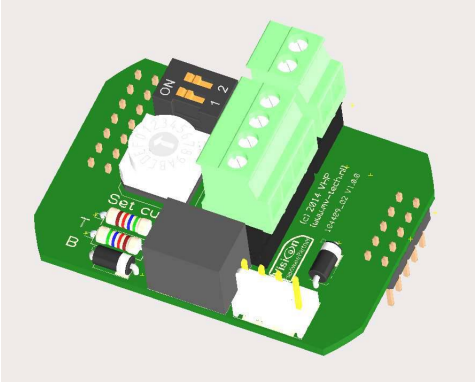

The carrier board was designed for interfacing the Lightning OEM to an external lamp and a camera. In extremely space constrained applications it can be useful to split the lamp and controller.

It is also possible to not connect the camera. In that case a jumper needs to be placed on J5.

The settings for current and pulse/cooldown duration can be done on the carrier board.

Connectors

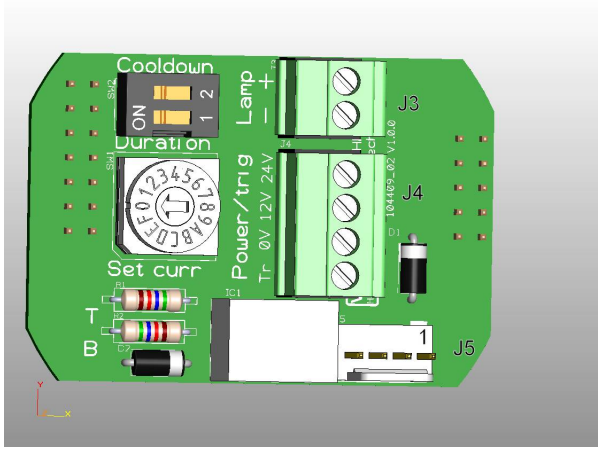

There are 3 connectors on the carrier board. These are marked J3, J4, J5 on the above image. Also J5 pin 1 is marked.

J3: lamp connector

Pin	Function	description
1	Lamp +	Connect to the lamp. *!!! Important note !!!* *Lamp + does **not** equal Power +.* *Lamp – does **not** equal Power 0V* *Connect the lamp only to this connector* 10A is high current. Use the largest possible wires and keep them short to avoid voltage drops over the wires.
2	Lamp -	

J4: Power / trigger input

Pin	Function	description
1	+24V	24V power input
2	+12V	Auxiliary 12V power input. The module has an integrated 24V → 12V regulator, which can supply 0.5A to the camera. If more power is needed, an external 12V can be supplied.
3	0V	0V for power and trigger
4	+Trigger	Positive trigger input. Referenced to 0V

J5: Camera

Pin	Function	description
1	+12V	Power for camera
2	0V	Power for camera and reference for the I/O
3	Trigger input	An trigger signal input from J4 will be forwarded to the camera through this pin.
4	Exposure output	Exposure signal from camera. Will be forwarded to Lighting OEM board as a lamp trigger.

If a camera will not be connected, the lamp can also be triggered directly from the trigger input on J4. In that case a jumper needs to be placed over pin 3 and 4 of J5.

Settings

Set current

The current can be set by selecting matching values of the 2 resistors marked with T and B. Details on this subject can be found in section 2.1.2

Pulse duration

The codewheel switch allows the user to set the pulse duration.

code	Pulse duration (µs)	code	Pulse duration (µs)
0	50	8	450
1	100	9	500
2	150	A	550
3	200	B	600
4	250	C	650
5	300	D	700
6	350	E	800
7	400	F	1000

Cooldown

The cooldown duration can be set with the DIP switchSets the cooldown duration.

pos 2	pos 1	Cooldown duration (ms)
off	off	10
off	on	20
on	off	30
on	on	40